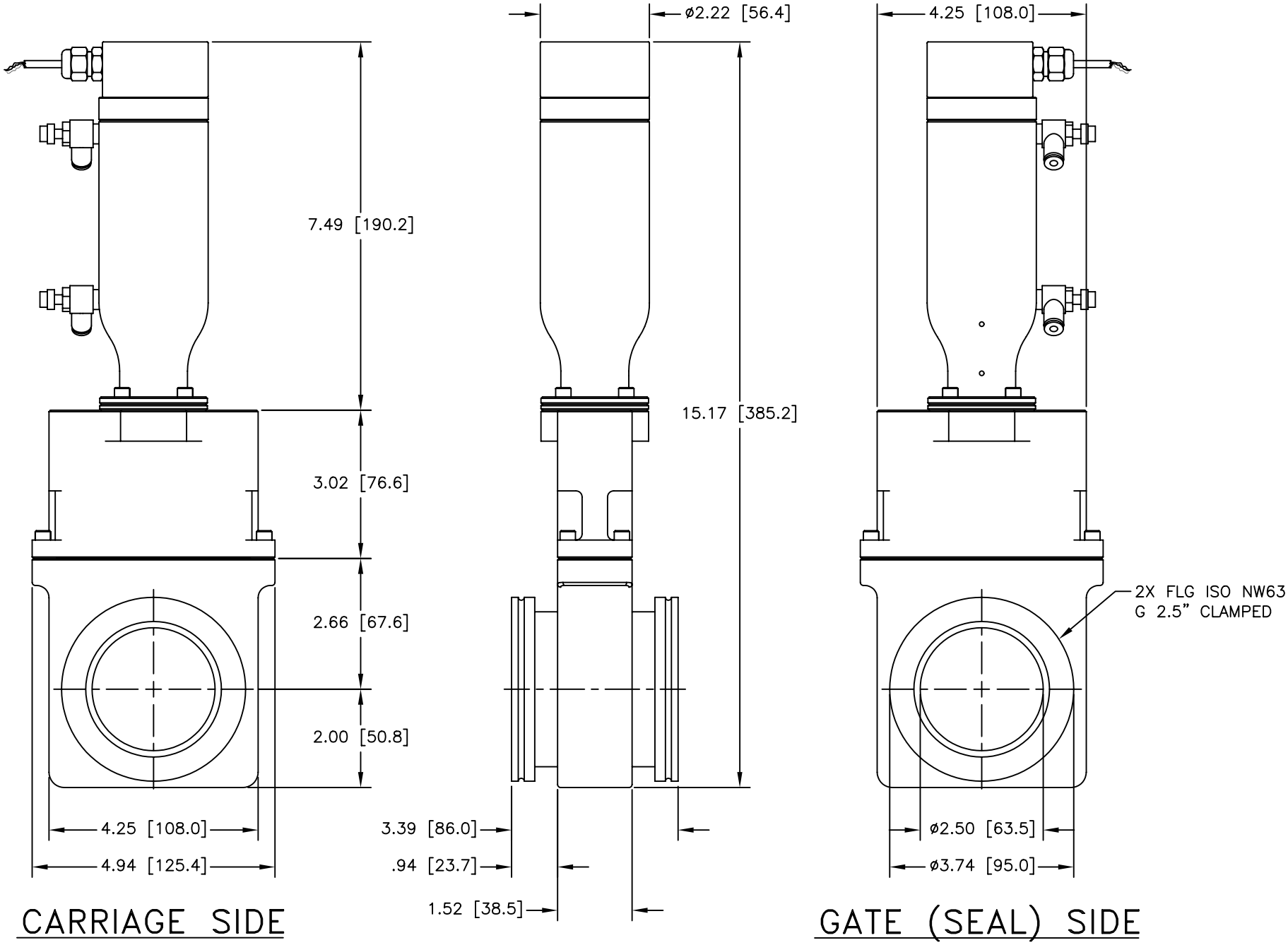

OUTLINE DIMENSION DRAWING

12880 MOYA BLVD., RENO, NV 89506

DRAWING NUMBER	DRAWING TITLE	REVISION
13104-2BW	G 2.5" ALUM/RSTD/PNU/ISO CLAMP MODEL #81212-0256R	B